Ipad Air2 boot high current

The customer sent an Ipad Air2Previously repaired machine, and found that the battery and the LCD cable are covered with thermal insulation tape.Disassemble the motherboard and measure the battery VCC and PPVCC-MAN to the ground value is normal.Clip Adjustable Power supply power-on test, trigger the boot pin power-on current has a normal boot.I thought there was no problem with the motherboard, and the screen test.Triggering the boot pin When the current jumps normally to the bright screen, the current suddenly becomes large, and the power management chip is hot.Pull the screen to the good board test screen as normal, and determine the fault on the motherboard.Measuring the display interface on the main board found that the backlight VCC pin has an infinity value, which is determined to be a problem with the backlight circuit.The two Inductor s near the measurement interface are normal, then the two diodes connected to the Inductor are measured, and both diodes are blown.Replace the diode and solve the problem.

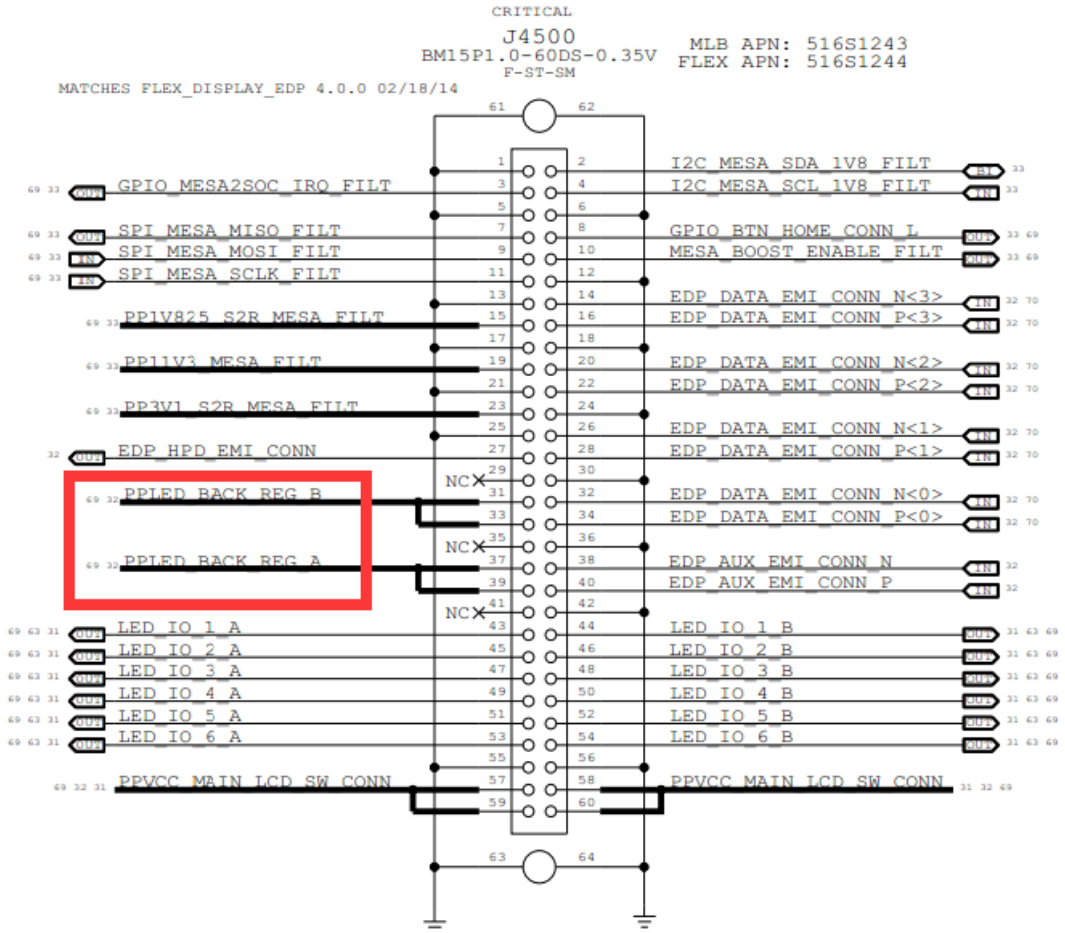

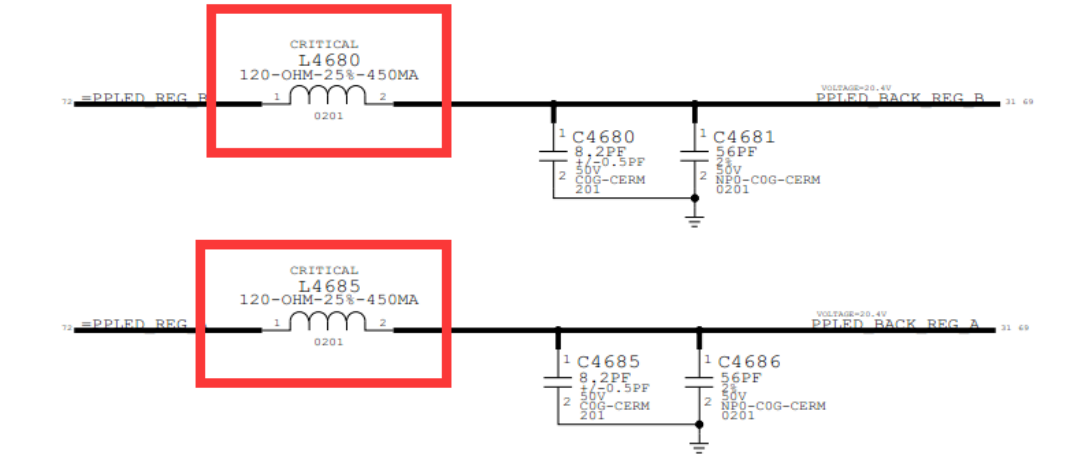
CRITICAL
L4680
120-OHM-25%-450MA
0201
=PPLED_REG_B
PPLED_BACK_REG_B
C4680
8.2PF
+/-0.5PF
50V
C0G-CERM
201
C4681
56PF
5%
50V
NP0-C0G-CERM
0201

CRITICAL
L4685
120-OHM-25%-450MA
0201
=PPLED_REG
PPLED_BACK_REG_A
C4685
8.2PF
+/-0.5PF
50V
C0G-CERM
201
C4686
56PF
5%
50V
NP0-C0G-CERM
0201

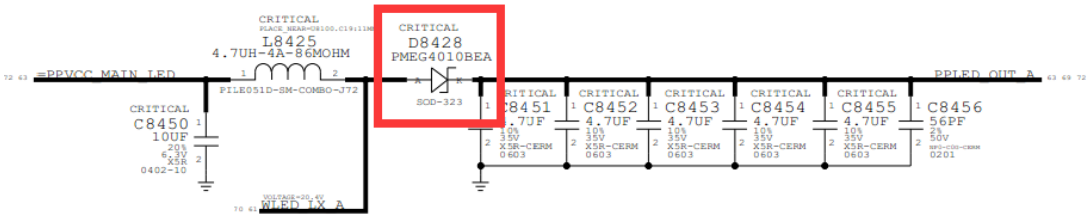
CRITICAL
L8425
4.7UH-4A-86MOHM
PILE051D-SM-COMBO-J72
CRITICAL
D8428
PMEG4010BEA
SOD-323
=PPVCC_MAIN_LED
PPLED_OUT_A
CRITICAL
C8450
10UF
20%
6.3V
X5R
0402-10
C8451
4.7UF
10%
35V
X5R-CERM
0603
C8452
4.7UF
10%
35V
X5R-CERM
0603
C8453
4.7UF
10%
35V
X5R-CERM
0603
C8454
4.7UF
10%
35V
X5R-CERM
0603
C8455
4.7UF
10%
35V
X5R-CERM
0603
C8456
56PF
5%
50V
0201
VOLTAGE=20.4V
WLED_TX_A

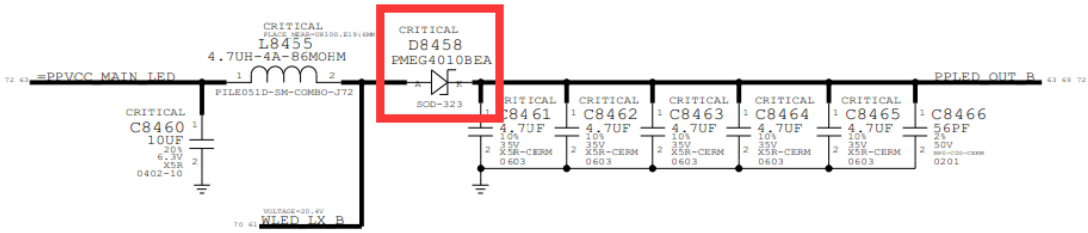
CRITICAL
L8455
4.7UH-4A-86MOHM
PILE051D-SM-COMBO-J72
CRITICAL
D8458
PMEG4010BEA
SOD-323
=PPVCC_MAIN_LED
PPLED_OUT_B
CRITICAL
C8460
10UF
20%
6.3V
X5R
0402-10
C8461
4.7UF
10%
35V
X5R-CERM
0603
C8462
4.7UF
10%
35V
X5R-CERM
0603
C8463
4.7UF
10%
35V
X5R-CERM
0603
C8464
4.7UF
10%
35V
X5R-CERM
0603
C8465
4.7UF
10%
35V
X5R-CERM
0603
C8466
56PF
5%
50V
0201
VOLTAGE=20.4V
WLED_TX_B

